JBMC

toilet seats

2027 | 2028



11.2026

Welcome to JBMC
toilet seats

28 Permanent Collaborators

600.000 / Year Production Capacity

26% Electrical Power
by solar self-production

5.000 m²

Sales volume **5.000.000€**

Production Capacity **24h / 6 days**

Welcome to the **JBMC 2027/2028** catalogue!

It's with great pride that we present our latest and most ambitious collection. For the 2027-2028 biennium, **JBMC** reinforces its position as a leading Portuguese manufacturer and developer of Duroplast and Thermoplast toilet seats.

Guided by our status as an ISO 9001 and ISO 14001 certified company, this catalogue reflects our passion for details, combining contemporary design with high-precision engineering. Each product presented here is submitted to rigorous resistance and ergonomic tests at our internal laboratory ensuring compliance with the demanding NF 240 standards.

More than simply creating components, we offer customised solutions. In this edition, we highlight our laser engraving technologies, our Slim & Classic collections, as well as the matte finishes, all designed to meet the evolving trends of modern architecture and hospitality sector.

Thank you for the continuous trust of our partners, distributors and customers. Together, we continue to transform spaces through innovation, sustainability and the excellence of our Made in Portugal seal.

We invite you to explore our range of products!

JBMC
toilet seats

2003 – 2004

JBMC is established at S. M. Feira's Conservatory and a factory building with 2.000 m² is acquired.

First mould production.
First italian made compression machine is installed.

2005 – 2006

First universal shape Toilet Seats for DIY market start.
Second compression machine is installed.

New partnerships with main Portuguese ceramic brands are celebrated. Third compression machine arrives.

2007 – 2008

Enlargement of building to 2.900 m².
First participation at an international exhibition.

Registration of SENSOFT® brand.
High-end Toilet Seats are developed.
Fourth compression machine is purchased.

2009 – 2010

First participation at ISH and again exhibit at CERSAIE.
Acquisition of neighbour building increasing area to 4.000 m².

Strategic product range expansion: First Thermoplast Toilet Seat.
Fifth compression machine acquired, now from Germany.

2011 – 2012

Quality Management System Certification ISO 9001.
First injection machine acquired to produce economic Toilet Seats.

Factory certification according to French standards NF 240.
First exportations to OEM Ceramic Companies.

2013 – 2014

Inauguration of **JBMC** Internal Tests Laboratory.
New software Solidworks installation for R&D department.

Registration of CLIPP-OFF® brand for Toilet Seats. Second CNC milling machine is purchased to increase moulds production.

2015 – 2016

Exhibition at CEVISAMA fair and agreement established with Spanish distributor for **JBMC** Toilet Seats.

Environmental Management System Certification ISO 14001.
2nd injection machine to produce CLIPP-OFF® economic Toilet Seats.

2017 – 2018

Installation of photovoltaic panels for solar energy production.

Toilet Seat for People with Reduced Mobility is designed.
R&D reinforcement in robotic area and 3D printing.

2019 – 2020

New industrial management system that allow an overall control in real time.

SME Líder 2020 (Small and Medium Enterprises Leader Status).
NF240 Laboratory Tests Machine.

2021 – 2022

Registration of CLIPPSYS® brand for Slim Toilet Seats.
New injection machines to increase our components production.

SME Líder 2021 (Small and Medium Enterprises Leader Status).
Increase in the area of photovoltaic panels to a total of 1.200 m².

2023 – 2024

First laser machine to engrave brands on Toilet Seats.
Registration of DEEPMATTE® brand for Toilet Seats.
SME Excellence 2022.

Acquisition of new laser machines to increase our Toilet Seats production with engraved brands.

2025 – 2026

Kondia CNC replacement for high precision AXILE Machining Center.
Replacement of packaging equipment with more efficient systems.

Integration of Biocomposite materials into our Thermoplast Toilet Seat range.



Research & Development

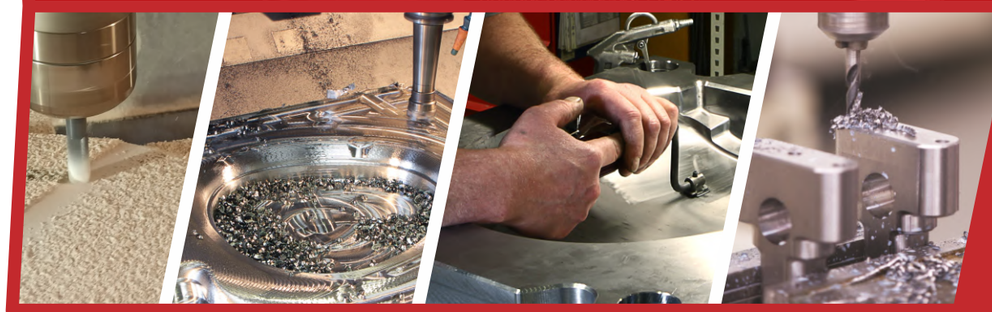

Prototype & Tooling



Planning



Production

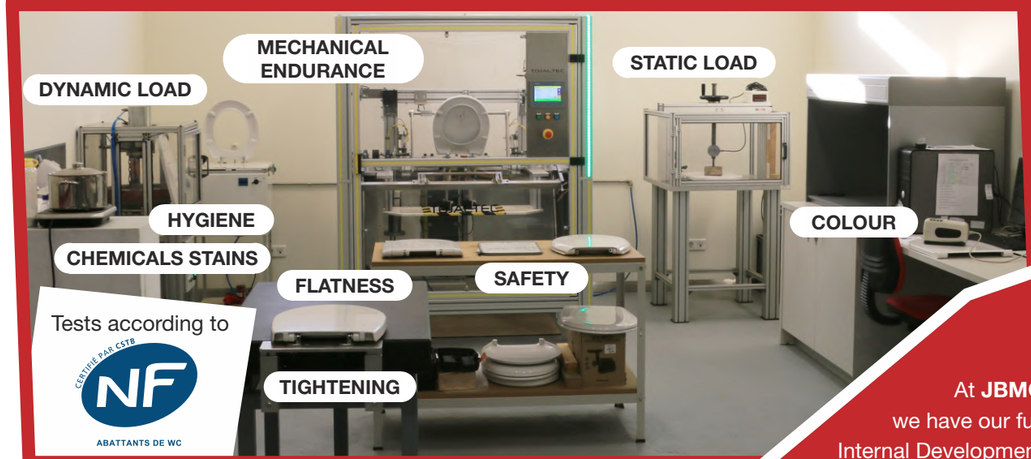

Quality

At **JBMC**
we have our full
Internal Development

Quality and Environment Management System
certified in accordance with the
NP EN ISO 9001 and **NP EN ISO 14001**

BIOCOMPOSITE materials
A THERMOPLAST toilet seat is made with about 20% recycled materials, such as Bivalve Shells for example.



THERMOPLAST
0% Production waste.
In this area, 100% of the production waste is fully reintegrated into the process while ensuring compliance with product quality standards.



DUROPLAST
100% Production waste is reused:
- as blasting material for paint removal
- as RDF (Refuse-Derived Fuel)

FSC
Certified cardboard and paper



SUSTAINABLE PACKAGING
Boxes with a soft-touch interior finish to avoid plastic film (upon request).
Toilet seats without individual box to optimize transport (upon request).



PHOTOVOLTAIC PANELS
Total of 340 MWh
26% Electrical Power by solar self-production

COMPANY'S PROFILE 1

DUROPLAST

CLIPPSYS SYSTEM


BARI | 9


BERLIN | 10


GLASGOW | 11


OSLO | 12


PARIS | 13

CLIPP-OFF SYSTEM


BELFAST| 15


BREMEN | 16


GENEVA | 17


ITALY V3 | 18


NORWAY | 19


OBYECT | 20


PORTO | 21


SPLIT | 22


ZURICH | 23

CLASSIC SYSTEM


BELGIUM | 24


ESSEN | 25


ESTONIA | 26


FRANCE | 27


GREECE | 28


HOLLAND LUX | 29


IMOLA | 30


ITALY | 31


LETONIA | 32


LISBOA | 33


MANCHESTER | 34


MONACO | 35


SWEDEN | 36

HOSPITALITY SYSTEM


ITALY PROJECT | 37


ROMA PROJECT | 38


PMR | 39

THERMOPLAST

CLIPP-OFF SYSTEM


ADELAIDE | 43


CHILE | 44


RHODOS | 45


TANZANIA | 46


TORONTO | 47

CLASSIC SYSTEM


BRAZIL | 48

CANADA | 49

LATVIA | 50

PANAMA | 51

KIDS

MADAGASCAR | 52

SPECIFIC SHAPES 55

COLOURS 61

PACKAGING 62

HINGES 64

BUFFERS 71

CLIPPSYS®

FOR A SLIMMER DESIGN
WITH AN EASIER ASSEMBLING





CLIPPOFF®

FOR AN EASIER AND SIMPLER CLEANING

SENSOFT®

FOR A NOISELESS CLOSURE



DUROPLAST
TOILET SEATS

DUROPLAST: Urea Formaldehyde Thermosetting compound

- ENVIRONMENTAL FRIENDLY
- SCRATCH RESISTANCE
- UV-LIGHT RESISTANCE
- ANTISTATIC
- BURN RESISTANCE
- CLEANING FRIENDLY
- HARDNESS
- CHEMICAL RESISTANCE

ANTIBACTERIAL

Germs and bacterial protection
Improving hygiene

BARI

MODEL N.	**347**
MATERIAL	**DUROPLAST**
WEIGHT	**1,70 NET**
ANTIBACTERIAL	**UPON REQUEST**
BUFFERS	**KIT 5.1**

CLIPPSYS® SENSOFT®





NEW



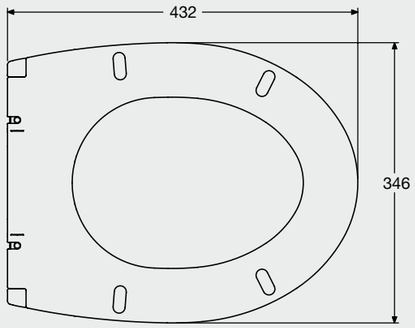

RECOMMENDED HINGES



D662 D660

BERLIN

MODEL N.	**327**
MATERIAL	**DUROPLAST**
WEIGHT	**1,90 NET**
ANTIBACTERIAL	**UPON REQUEST**
BUFFERS	**KIT 5.1**

CLIPPSYS® SENSOFT®

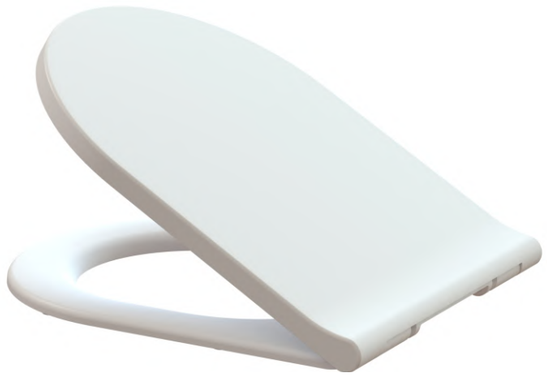

NEW





RECOMMENDED HINGES



D662 D660

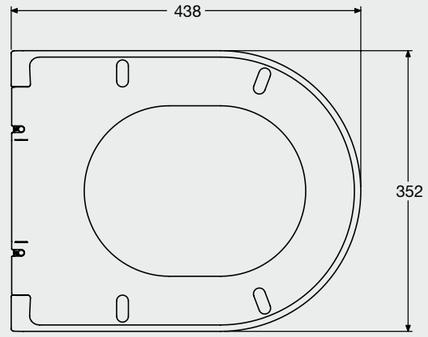

GLASGOW

MODEL N.	**334**
MATERIAL	**DUROPLAST**
WEIGHT	**1,85 NET**
ANTIBACTERIAL	**UPON REQUEST**
BUFFERS	**KIT 5.1**

CLIPPSYS® SENSOFT®







NEW

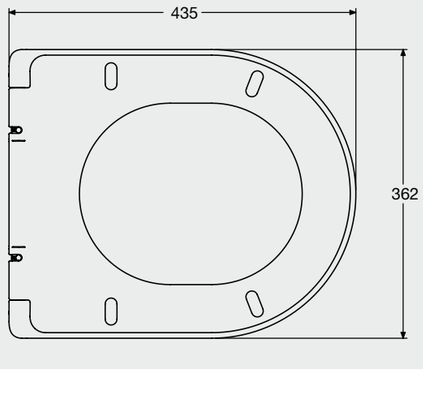

RECOMMENDED HINGES



D662 D660

OSLO

MODEL N.	**336**
MATERIAL	**DUROPLAST**
WEIGHT	**1,90 NET**
ANTIBACTERIAL	**UPON REQUEST**
BUFFERS	**KIT 5.1**

CLIPPSYS® SENSOFT®



NEW



RECOMMENDED HINGES



D662 D660



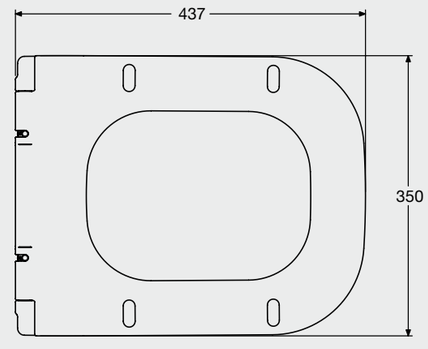

JBMC toilet seats

PARIS

MODEL N.	**311**
MATERIAL	**DUROPLAST**
WEIGHT	**1,80 NET**
ANTIBACTERIAL	**UPON REQUEST**
BUFFERS	**KIT 5.1**

CLIPPSYS® SENSOFIX CERTIFIÉ PAR CSTB NF ABATTANTS DE WC





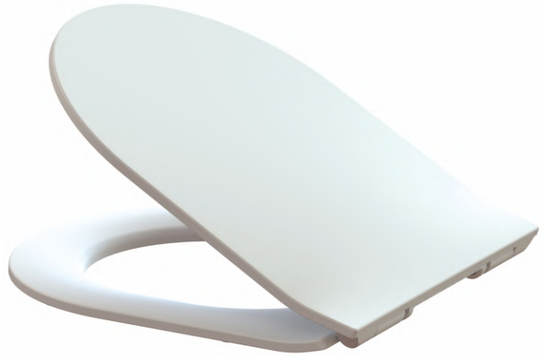

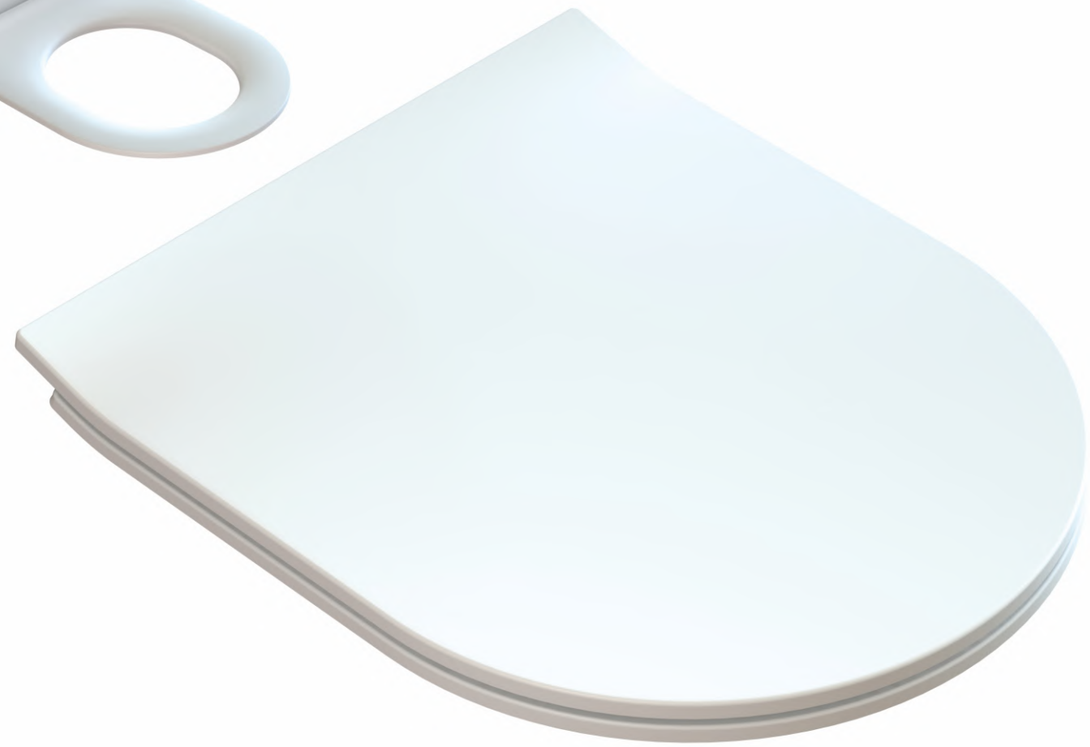

DEEPMATTE®

Matte finish without paint in all colours!





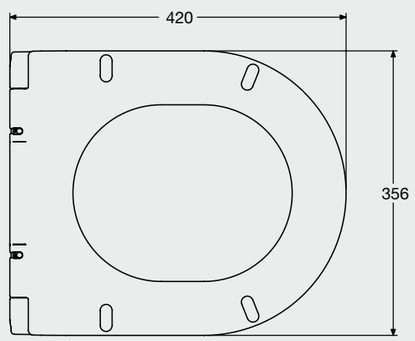

RECOMMENDED HINGES



D662



D660



BELFAST

MODEL N.	**329**
MATERIAL	**DUROPLAST**
WEIGHT	**2,00 NET**
ANTIBACTERIAL	**UPON REQUEST**
BUFFERS	**KIT 3.1**

CLIPPOFF®







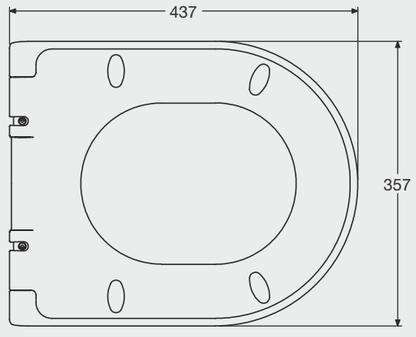

RECOMMENDED HINGES

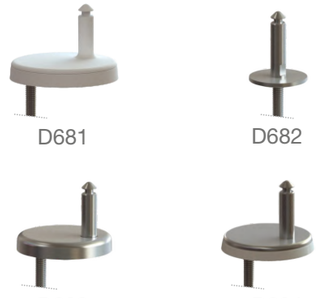

BREMEN

MODEL N.	**155**
MATERIAL	**DUROPLAST**
WEIGHT	**2,20 NET**
ANTIBACTERIAL	**UPON REQUEST**
BUFFERS	**KIT 2.2**

CLIPPOFF®







RECOMMENDED HINGES

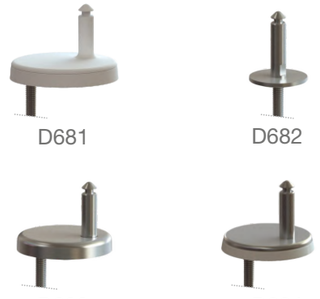

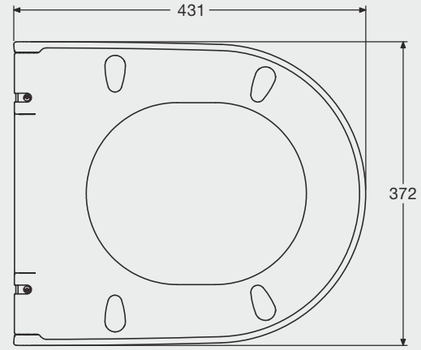

GENEVA

MODEL N.	**232**
MATERIAL	**DUROPLAST**
WEIGHT	**2,00 NET**
ANTIBACTERIAL	**UPON REQUEST**
BUFFERS	**KIT 3.1**

CLIPPOFF®







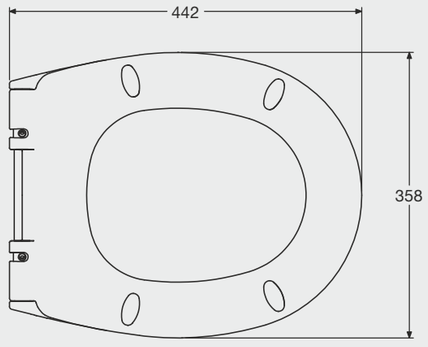

RECOMMENDED HINGES

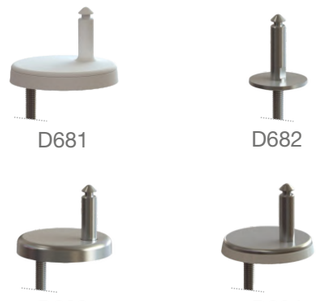

ITALY V3

MODEL N.	**259**
MATERIAL	**DUROPLAST**
WEIGHT	**1,75 NET**
ANTIBACTERIAL	**UPON REQUEST**
BUFFERS	**KIT 3.1**

CLIPPOFF®







RECOMMENDED HINGES

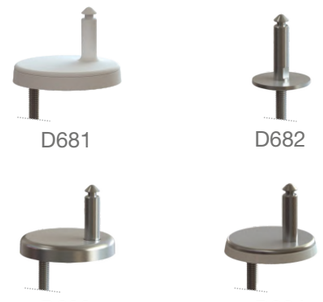

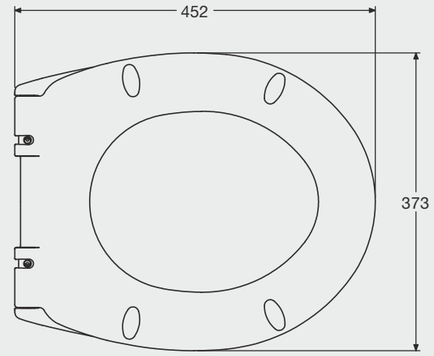

NORWAY

MODEL N.	**077**
MATERIAL	**DUROPLAST**
WEIGHT	**2,10 NET**
ANTIBACTERIAL	**UPON REQUEST**
BUTTERS	**KIT 2.2**

CLIPPOFF®







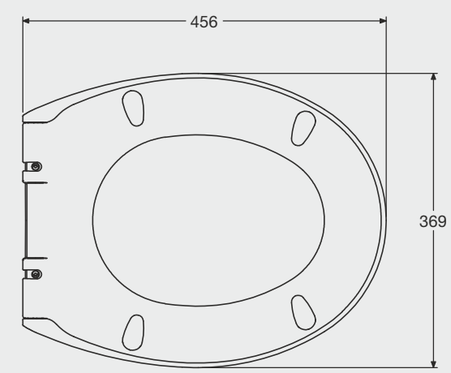

RECOMMENDED HINGES



OBYECT

MODEL N.	**067**
MATERIAL	**DUROPLAST**
WEIGHT	**2,30 NET**
ANTIBACTERIAL	**UPON REQUEST**
BUTTERS	**KIT 2.2**

CLIPPOFF®







RECOMMENDED HINGES



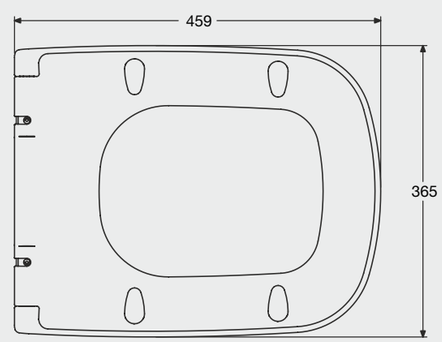

PORTO

MODEL N.	**042**
MATERIAL	**DUROPLAST**
WEIGHT	**1,85 NET**
ANTIBACTERIAL	**UPON REQUEST**
BUFFERS	**KIT 3.1**

CLIPPOFF®







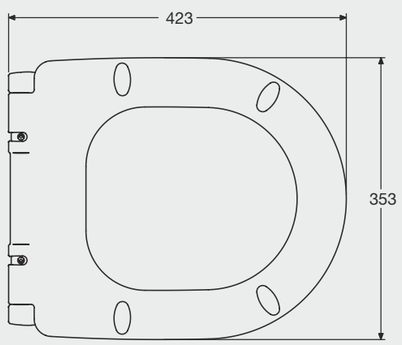

RECOMMENDED HINGES



SPLIT

MODEL N.	**222**
MATERIAL	**DUROPLAST**
WEIGHT	**1,85 NET**
ANTIBACTERIAL	**UPON REQUEST**
BUFFERS	**KIT 3.1**

CLIPPOFF®



NEW





RECOMMENDED HINGES

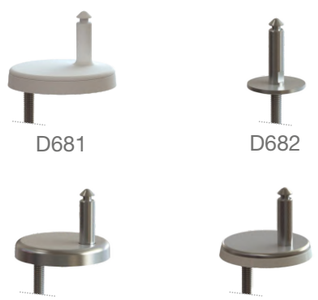

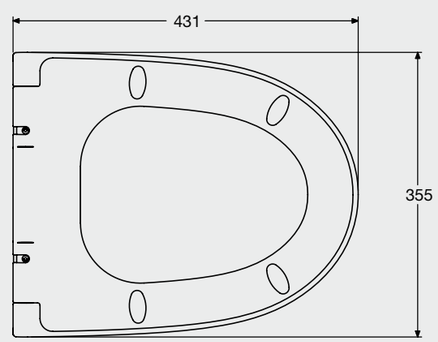

ZURICH

MODEL N.	**267**
MATERIAL	**DUROPLAST**
WEIGHT	**2,20 NET**
ANTIBACTERIAL	**UPON REQUEST**
BUFFERS	**KIT 3.1**

CLIPPOFF®







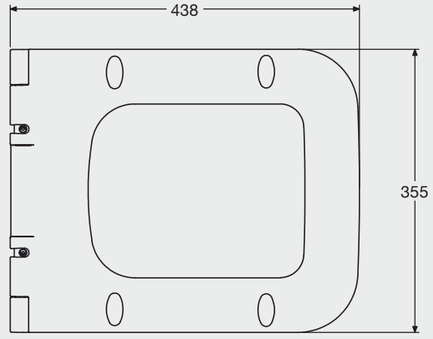

RECOMMENDED HINGES


D681


D682


D683


D684

BELGIUM

MODEL N.	**079**
MATERIAL	**DUROPLAST**
WEIGHT	**2,00 NET**
ANTIBACTERIAL	**UPON REQUEST**
BUFFERS	**KIT 2.1**







RECOMMENDED HINGES


D352


D300


D250


D203

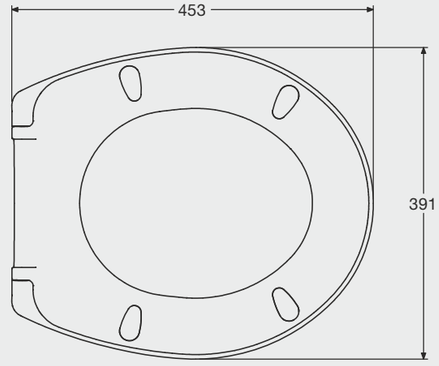

ESSEN

MODEL N.	**180**
MATERIAL	**DUROPLAST**
WEIGHT	**2,10 NET**
ANTIBACTERIAL	**UPON REQUEST**
BUFFERS	**KIT 3.1**



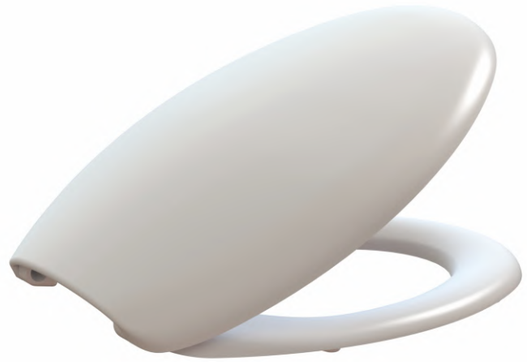



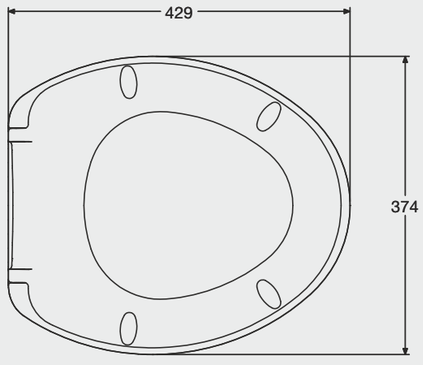

RECOMMENDED HINGES



ESTONIA

MODEL N.	**161**
MATERIAL	**DUROPLAST**
WEIGHT	**2,20 NET**
ANTIBACTERIAL	**UPON REQUEST**
BUFFERS	**KIT 2.1**







RECOMMENDED HINGES



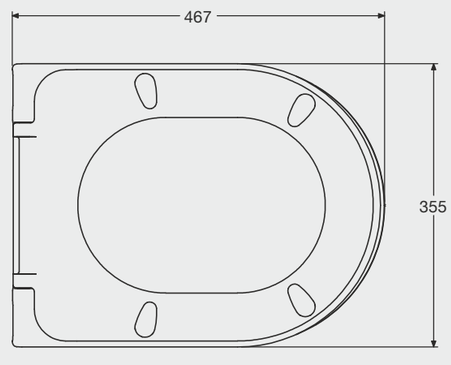

FRANCE

MODEL N.	**044**
MATERIAL	**DUROPLAST**
WEIGHT	**1,90 NET**
ANTIBACTERIAL	**UPON REQUEST**
BUTTERS	**KIT 1.1**







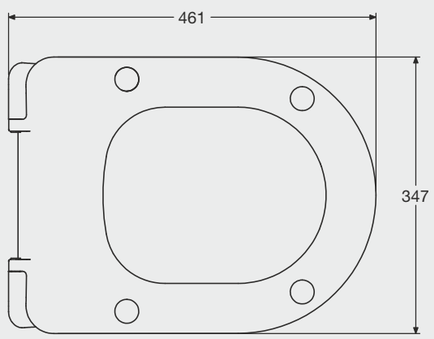

RECOMMENDED HINGES


D102


D300


D203


D002

GREECE

MODEL N.	**198**
MATERIAL	**DUROPLAST**
WEIGHT	**1,55 NET**
ANTIBACTERIAL	**UPON REQUEST**
BUTTERS	**KIT 3.1**







RECOMMENDED HINGES


D103


D352


D002

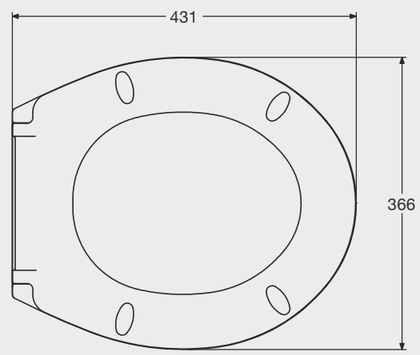

HOLLAND LUX

MODEL N.	**090**
MATERIAL	**DUROPLAST**
WEIGHT	**2,25 NET**
ANTIBACTERIAL	**UPON REQUEST**
BUFFERS	**KIT 2.1**







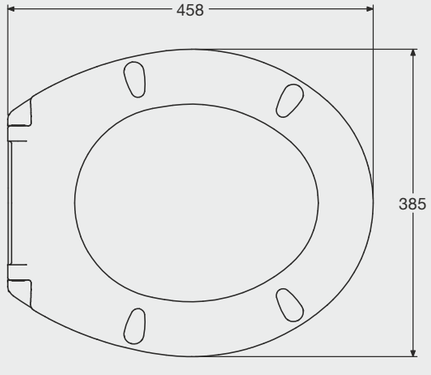

RECOMMENDED HINGES



D102 D300 D352 D002

IMOLA

MODEL N.	**330**
MATERIAL	**DUROPLAST**
WEIGHT	**1,55 NET**
ANTIBACTERIAL	**UPON REQUEST**
BUFFERS	**KIT 5.1**

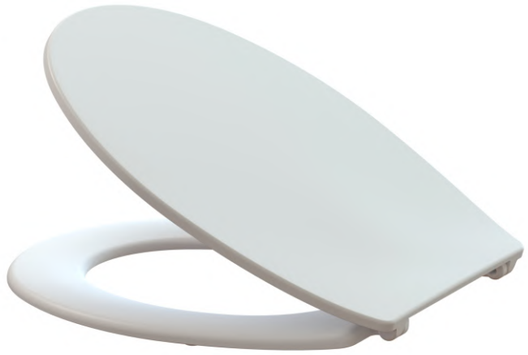





RECOMMENDED HINGES



D102 D300 D203 D002

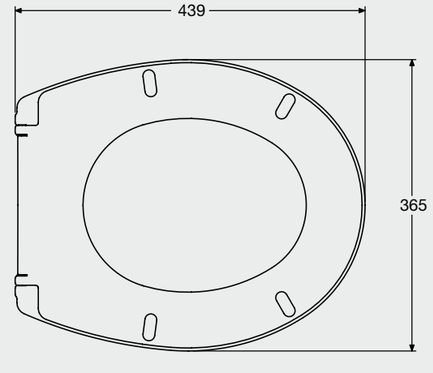

ITALY

MODEL N.	**130**
MATERIAL	**DUROPLAST**
WEIGHT	**1,75 NET**
ANTIBACTERIAL	**UPON REQUEST**
BUFFERS	**KIT 2.1**







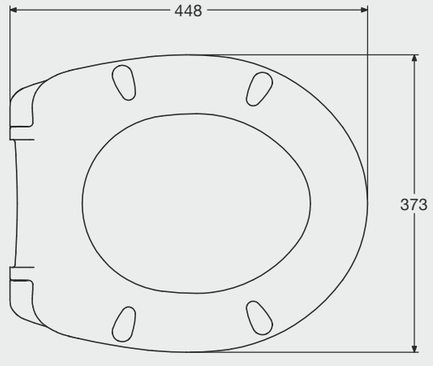

RECOMMENDED HINGES


D102


D300


D352


D002

LETONIA

MODEL N.	**194**
MATERIAL	**DUROPLAST**
WEIGHT	**2,40 NET**
ANTIBACTERIAL	**UPON REQUEST**
BUFFERS	**KIT 2.1**







RECOMMENDED HINGES


D352


D300


D250


D203

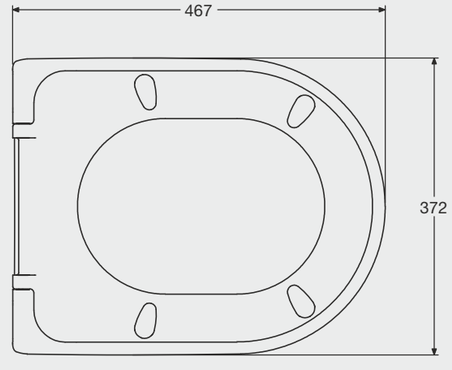

LISBOA

MODEL N.	**143**
MATERIAL	**DUROPLAST**
WEIGHT	**1,70 NET**
ANTIBACTERIAL	**UPON REQUEST**
BUFFERS	**KIT 1.1**







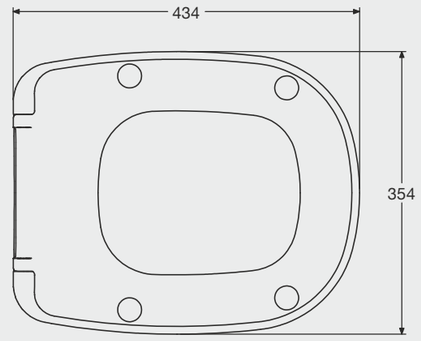

RECOMMENDED HINGES



MANCHESTER

MODEL N.	**208**
MATERIAL	**DUROPLAST**
WEIGHT	**2,00 NET**
ANTIBACTERIAL	**UPON REQUEST**
BUFFERS	**KIT 3.1**







RECOMMENDED HINGES



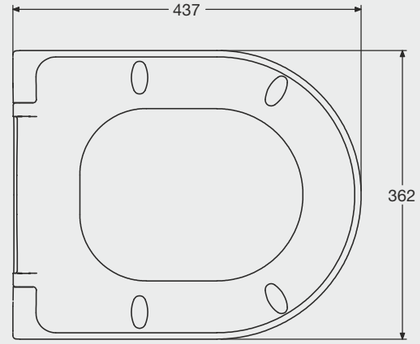

MONACO

MODEL N.	**201**
MATERIAL	**DUROPLAST**
WEIGHT	**2,40 NET**
ANTIBACTERIAL	**UPON REQUEST**
BUFFERS	**KIT 2.1**







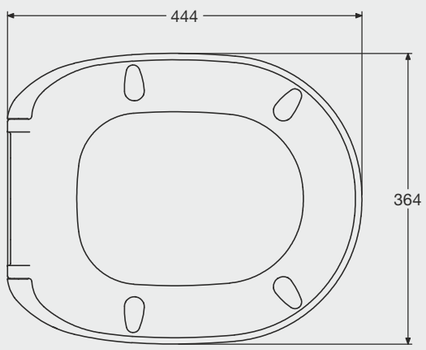

RECOMMENDED HINGES


D352


D300


D250


D203

SWEDEN

MODEL N.	**138**
MATERIAL	**DUROPLAST**
WEIGHT	**1,80 NET**
ANTIBACTERIAL	**UPON REQUEST**
BUFFERS	**KIT 2.1**







RECOMMENDED HINGES


D102


D300


D352


D002

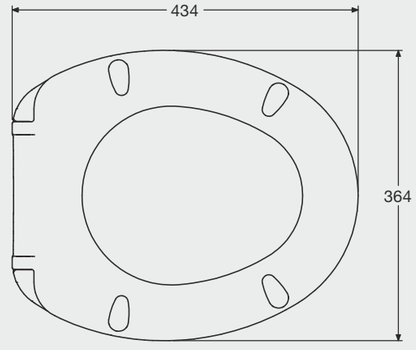

ITALY PROJECT

MODEL N.	**154**
MATERIAL	**DUROPLAST**
WEIGHT	**1,75 NET**
ANTIBACTERIAL	**UPON REQUEST**
BUFFERS	**KIT 2.1**







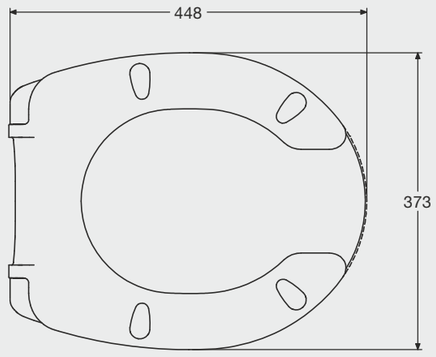

RECOMMENDED HINGES

ITALY PROJECT



D300 D352

PROJECT



D502 D500

ROMA PROJECT

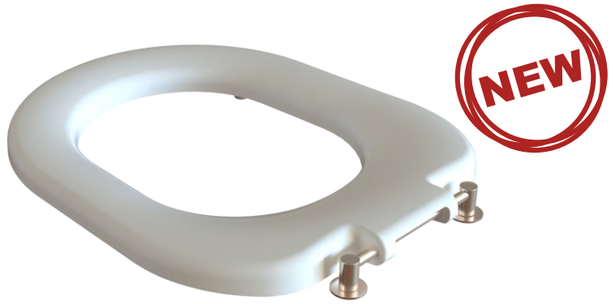

MODEL N.	**157**
MATERIAL	**DUROPLAST**
WEIGHT	**2,30 NET**
ANTIBACTERIAL	**UPON REQUEST**
BUFFERS	**KIT 2.1**





RECOMMENDED HINGES

ROMA



D300 D352

ROMA PROJECT



D501

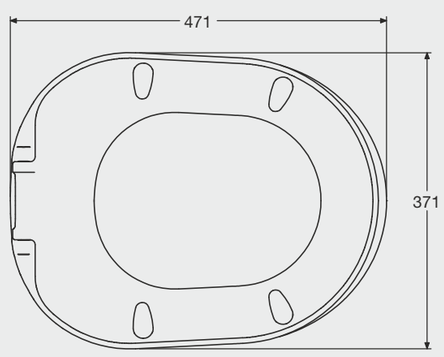

JBMC toilet seats

PMR

MODEL N.	**284**
MATERIAL	**DUROPLAST**
WEIGHT	**3,00 NET**
ANTIBACTERIAL	**UPON REQUEST**
BUFFERS	**KIT 1.2**







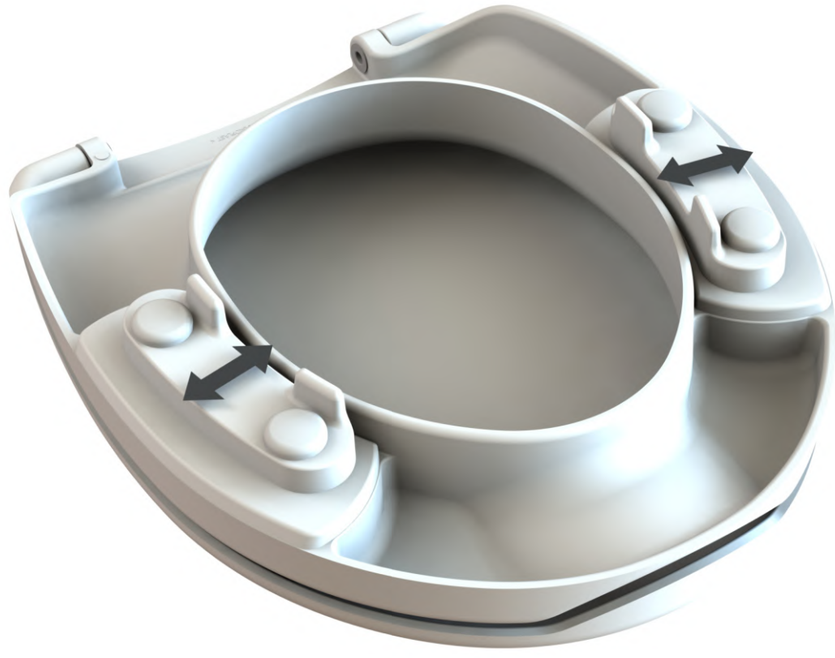



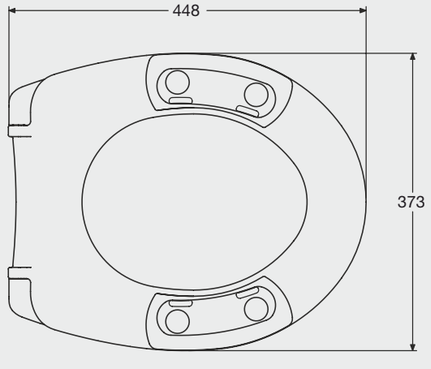

RECOMMENDED HINGES



D221 D222

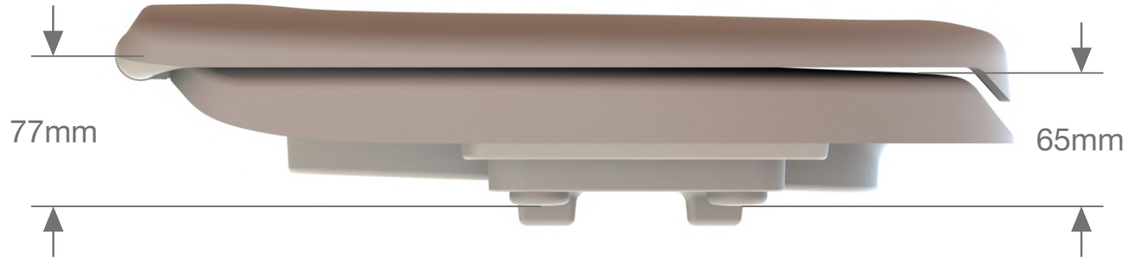

THERMOPLAST
TOILET SEATS

THERMOPLAST: High Rigidity Homopolymer Polypropylene

ENVIRONMENTAL FRIENDLY





CLEANING FRIENDLY

UV-LIGHT RESISTANCE





ELASTICITY

CHEMICAL RESISTANCE





Germs and bacterial protection
Improving hygiene

ADELAIDE

MODEL N.	**304**
MATERIAL	**THERMOPLAST**
WEIGHT	**1,20 NET**
ANTIBACTERIAL	**UPON REQUEST**
BUFFERS	**KIT 4.2**

CLIPPOFF®







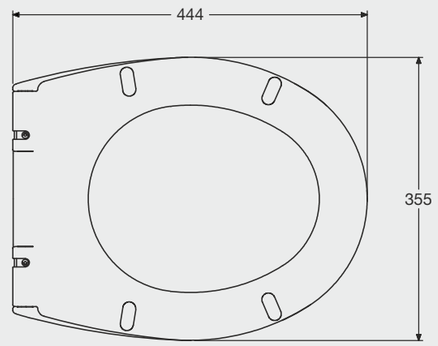

RECOMMENDED HINGES



CHILE

MODEL N.	**275**
MATERIAL	**THERMOPLAST**
WEIGHT	**1,22 NET**
ANTIBACTERIAL	**UPON REQUEST**
BUFFERS	**KIT 4.1**

CLIPPOFF®







RECOMMENDED HINGES



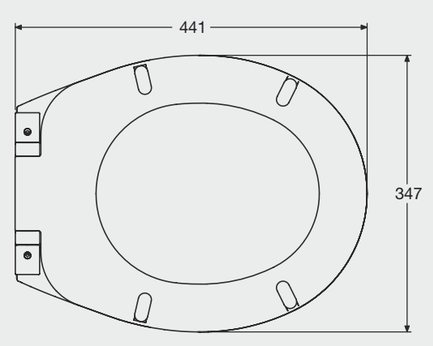

RHODOS

MODEL N.	**253**
MATERIAL	**THERMOPLAST**
WEIGHT	**1,20 NET**
ANTIBACTERIAL	**UPON REQUEST**
BUFFERS	**KIT 4.1**

CLIPPOFF®







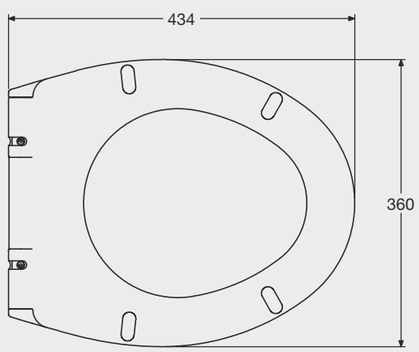

RECOMMENDED HINGES

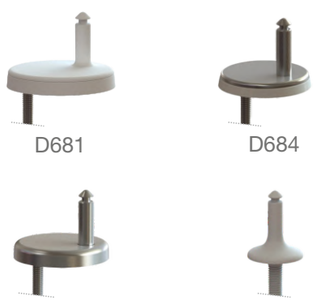

TANZANIA

MODEL N.	**293**
MATERIAL	**THERMOPLAST**
WEIGHT	**1,10 NET**
ANTIBACTERIAL	**UPON REQUEST**
BUFFERS	**KIT 4.1**

CLIPPOFF®







RECOMMENDED HINGES

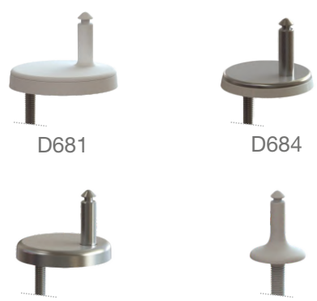

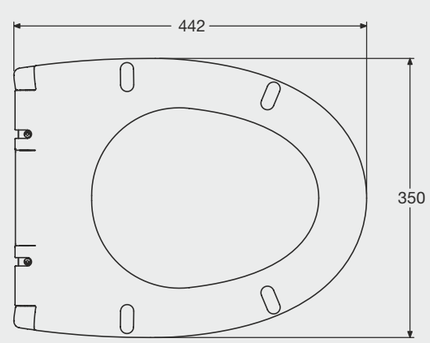

TORONTO

MODEL N.	**352**
MATERIAL	**THERMOPLAST**
WEIGHT	**1,20 NET**
ANTIBACTERIAL	**UPON REQUEST**
BUFFERS	**KIT 4.2**

CLIPPOFF®







NEW



RECOMMENDED HINGES

D681

D684

D683

D680

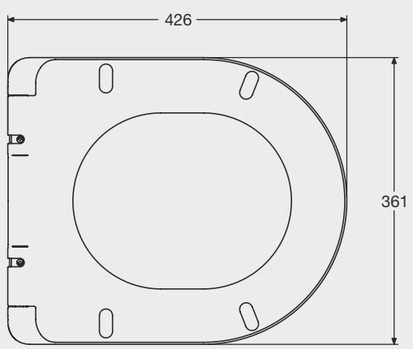

BRAZIL

MODEL N.	**254**
MATERIAL	**THERMOPLAST**
WEIGHT	**1,05 NET**
ANTIBACTERIAL	**UPON REQUEST**
BUFFERS	**KIT 4.1**







RECOMMENDED HINGES



D102



D002

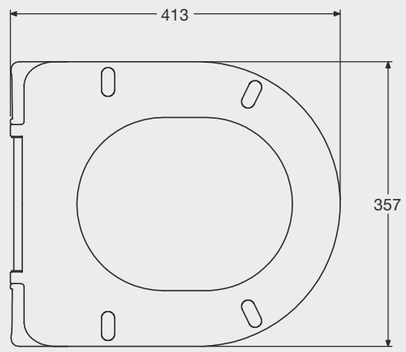

CANADA

MODEL N.	**231**
MATERIAL	**THERMOPLAST**
WEIGHT	**0,85 NET**
ANTIBACTERIAL	**UPON REQUEST**
BUFFERS	**KIT 4.2**







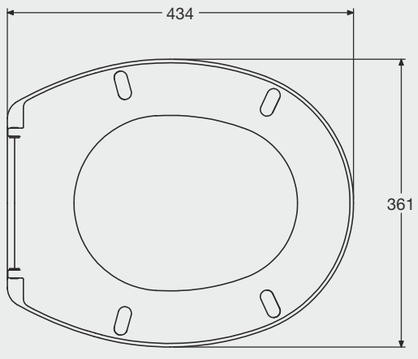

RECOMMENDED HINGES

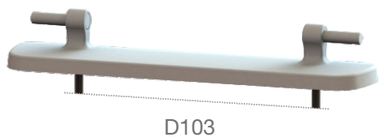

D103



D102



D002

LATVIA

MODEL N.	**200**
MATERIAL	**THERMOPLAST**
WEIGHT	**1,10 NET**
ANTIBACTERIAL	**UPON REQUEST**
BUFFERS	**KIT 4.2**







RECOMMENDED HINGES



D102



D002



D201

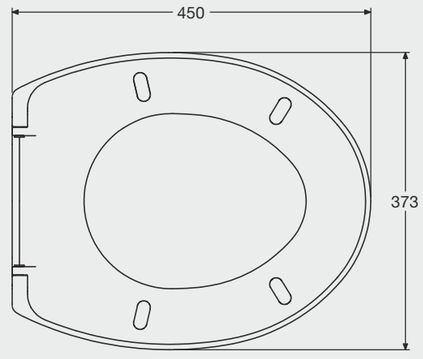

PANAMA

MODEL N.	**124**
MATERIAL	**THERMOPLAST**
WEIGHT	**1,25 NET**
ANTIBACTERIAL	**UPON REQUEST**
BUFFERS	**KIT 2.2**







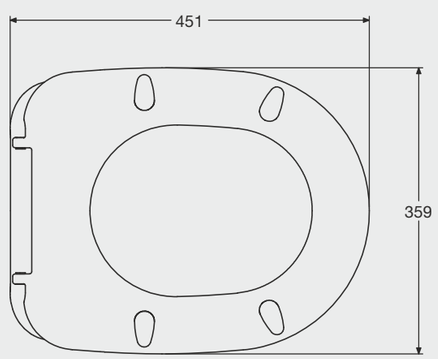

RECOMMENDED HINGES


D102


D002

MADAGASCAR

MODEL N.	**349**
MATERIAL	**THERMOPLAST**
WEIGHT	**0,75 NET**
ANTIBACTERIAL	**UPON REQUEST**
BUFFERS	**---**

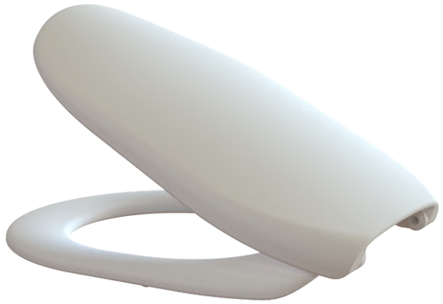

NEW





RECOMMENDED HINGES


D304


D300


D102


D203

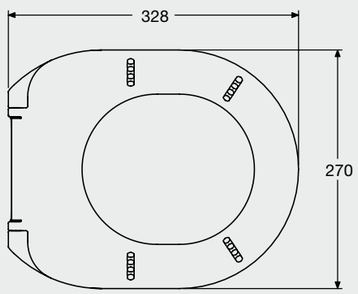

SPECIFIC SHAPES

ENVIRONMENTAL FRIENDLY



SCRATCH RESISTANCE



UV-LIGHT RESISTANCE



ANTISTATIC



BURN RESISTANCE



CLEANING FRIENDLY



HARDNESS



CHEMICAL RESISTANCE





Germs and bacterial protection
Improving hygiene

SPECIFIC SHAPES

ALGER

MODEL N.	**018**
MATERIAL	**DUROPLAST**
WEIGHT	**2,15 NET**
ANTIBACTERIAL	**UPON REQUEST**
BUFFERS	**KIT 1.1**



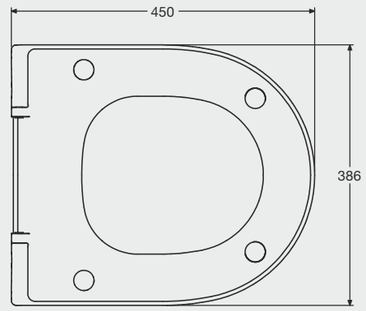

ATHENS

MODEL N.	**192**
MATERIAL	**DUROPLAST**
WEIGHT	**2,05 NET**
ANTIBACTERIAL	**UPON REQUEST**
BUFFERS	**KIT 2.1**



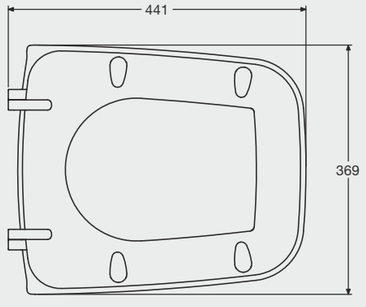

BARCELONA

MODEL N.	**178**
MATERIAL	**DUROPLAST**
WEIGHT	**1,65 NET**
ANTIBACTERIAL	**UPON REQUEST**
BUFFERS	**KIT 3.1**



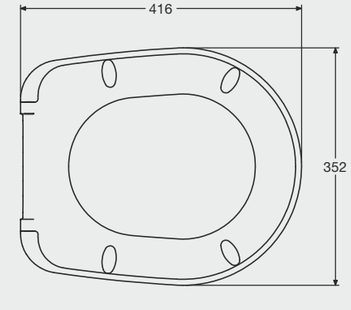

SPECIFIC SHAPES

BILBAO

MODEL N.	**296**
MATERIAL	**DUROPLAST**
WEIGHT	**1,90 NET**
ANTIBACTERIAL	**UPON REQUEST**
BUFFERS	**KIT 1.1**

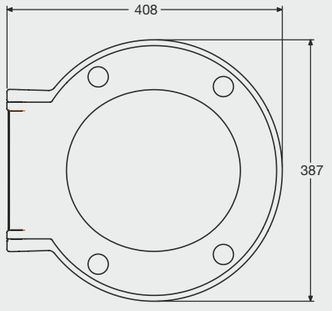



FINLAND

MODEL N.	**184**
MATERIAL	**DUROPLAST**
WEIGHT	**1,80 NET**
ANTIBACTERIAL	**UPON REQUEST**
BUFFERS	**KIT 2.1**

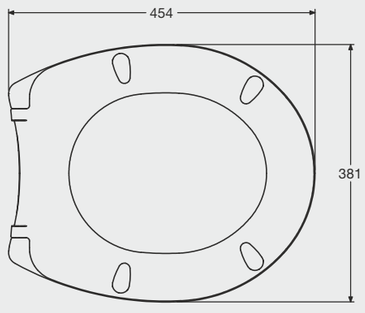



GRANADA

MODEL N.	**028**
MATERIAL	**DUROPLAST**
WEIGHT	**1,80 NET**
ANTIBACTERIAL	**UPON REQUEST**
BUFFERS	**KIT 1.1**

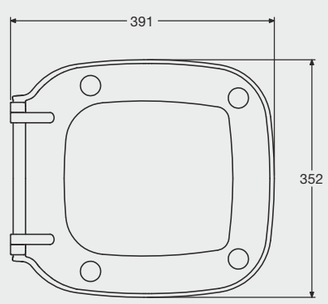



SPECIFIC SHAPES

HOLLAND ECO

MODEL N.	**091**
MATERIAL	**DUROPLAST**
WEIGHT	**1,75 NET**
ANTIBACTERIAL	**UPON REQUEST**
BUFFERS	**KIT 2.1**



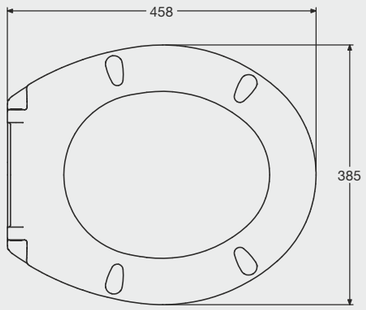

IRELAND

MODEL N.	**114**
MATERIAL	**DUROPLAST**
WEIGHT	**1,60 NET**
ANTIBACTERIAL	**UPON REQUEST**
BUFFERS	**KIT 2.1**



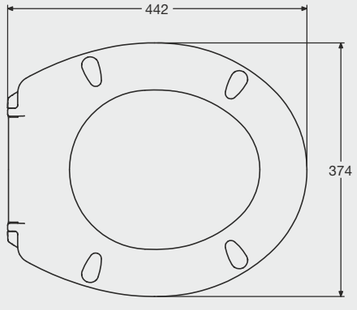

LYON

MODEL N.	**190**
MATERIAL	**DUROPLAST**
WEIGHT	**2,00 NET**
ANTIBACTERIAL	**UPON REQUEST**
BUFFERS	**KIT 2.1**



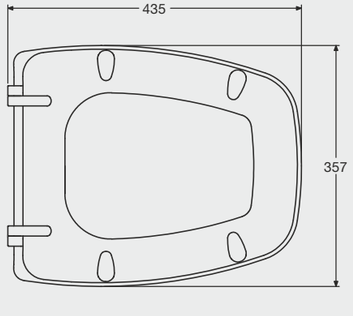

SPECIFIC SHAPES

MALAGA

MODEL N.	**118**
MATERIAL	**DUROPLAST**
WEIGHT	**1,90 NET**
ANTIBACTERIAL	**UPON REQUEST**
BUFFERS	**KIT 1.1**



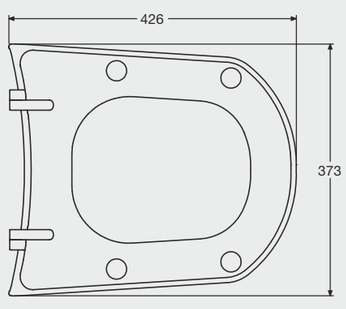

NIZZA

MODEL N.	**127**
MATERIAL	**DUROPLAST**
WEIGHT	**2,30 NET**
ANTIBACTERIAL	**UPON REQUEST**
BUFFERS	**KIT 1.1**



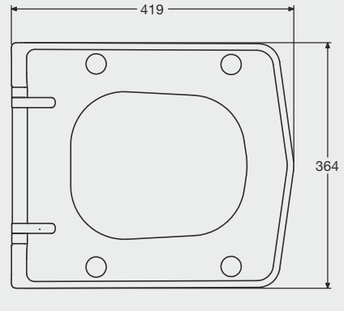

SANREMO

MODEL N.	**136**
MATERIAL	**DUROPLAST**
WEIGHT	**1,90 NET**
ANTIBACTERIAL	**UPON REQUEST**
BUFFERS	**KIT 2.1**



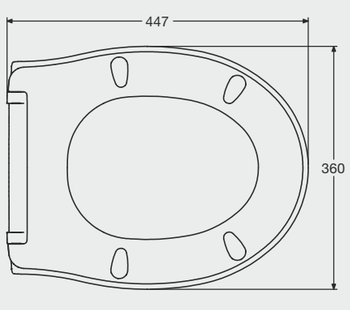

SPECIFIC SHAPES

SPAIN

MODEL N.	**053**
MATERIAL	**DUROPLAST**
WEIGHT	**1,45 NET**
ANTIBACTERIAL	**UPON REQUEST**
BUFFERS	**KIT 1.1**



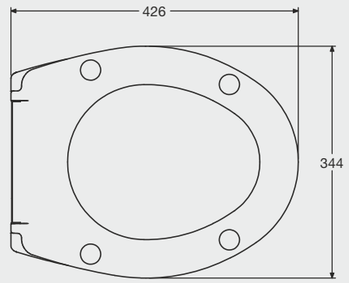

SWISS

MODEL N.	**113**
MATERIAL	**DUROPLAST**
WEIGHT	**1,90 NET**
ANTIBACTERIAL	**UPON REQUEST**
BUFFERS	**KIT 2.1**

SENSOFT



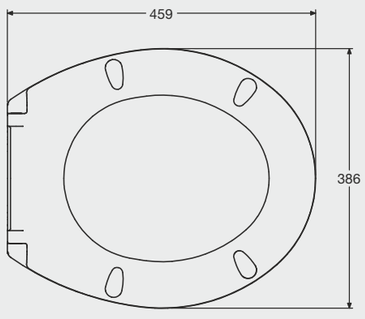

VALENCIA

MODEL N.	**165**
MATERIAL	**DUROPLAST**
WEIGHT	**1,90 NET**
ANTIBACTERIAL	**UPON REQUEST**
BUFFERS	**KIT 3.1**



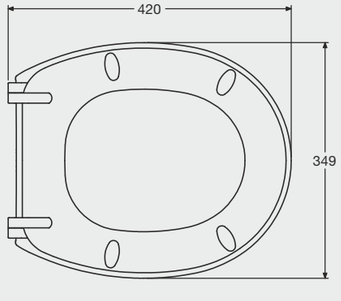

COLOURS

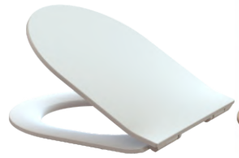

WHITE | 01
MOQ | 540 units



BAHAMA BEIGE | 05
MOQ | 540 units



PERGAMON | 09
MOQ | 540 units



TAUPE | 20
MOQ | 540 units

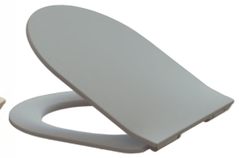

MANHATTAN GREY | 06
MOQ | 540 units

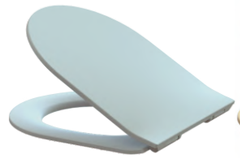

GREEN AGAIS | 21
MOQ | 540 units



INDIAN IVORY | 23
MOQ | 540 units

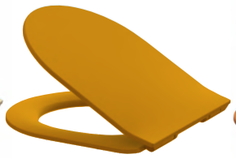

CURRY | 03
MOQ | 540 units



ORANGE | 14
MOQ | 540 units



ANTHRACITE GREY | 22
MOQ | 540 units



PINK | 13
MOQ | 540 units



RED | 11
MOQ | 540 units

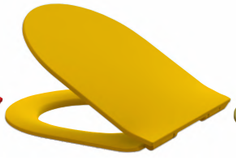

YELLOW | 08
MOQ | 540 units

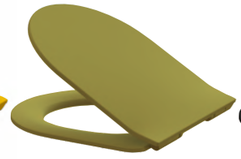

MOSS GREEN | 04
MOQ | 540 units



BLACK | 12
MOQ | 540 units



CALYPSO | 07
MOQ | 540 units



DARK BLUE | 02
MOQ | 540 units



LIGHT BLUE | 16
MOQ | 540 units



BERMUDA BLUE | 10
MOQ | 540 units



GRANIT | 15
MOQ | 540 units

NEW

THERMOPLAST ONLY



FLUORESCENT | 99
MOQ | 540 units

BIO COMPOSITE



BIOCOMPOSITE BIVALVE SHELLS | 98
MOQ | 540 units

PACKAGING

SINGLE BOX

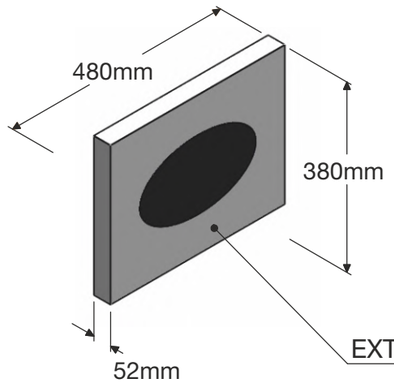

MULTIPLE PACKAGING
5 UNITS

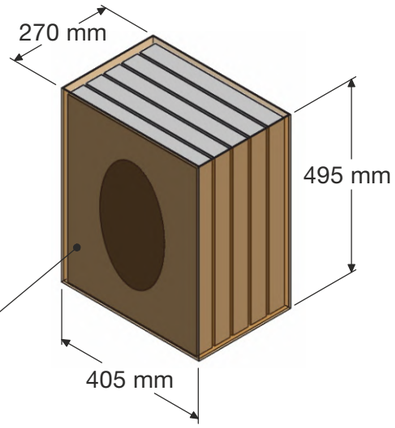

DISPLAY
20 UNITS

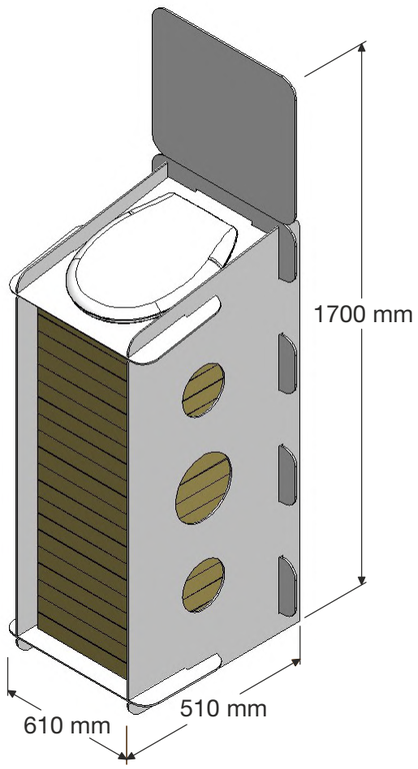

EURO-PALLET
36 MULTIPLE PACKAGING
180 UNITS

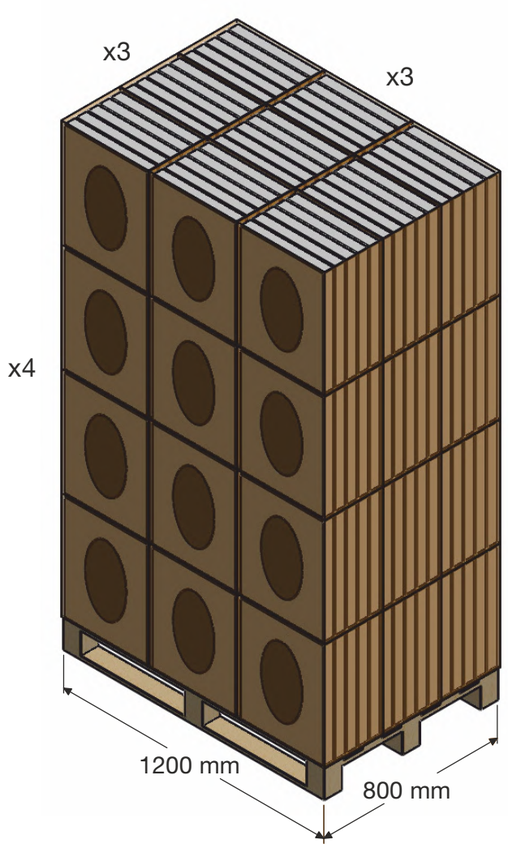

HINGES

NYLON: Polyamide 6 compound

Polyamide 6 fortified with nanoclay technology

STAINLESS STEEL: AISI 304 hardened steel DIN 2738H

BRASS: OT60 for die-cast injection moulding

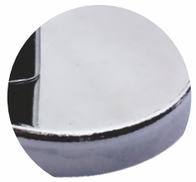

CHROME PLATED

CLIPPSYS® SYSTEM
FOR A SLIMMER DESIGN WITH AN EASIER ASSEMBLING

CLIPP-OFF® SYSTEM
FOR AN EASIER AND SIMPLER CLEANING

SENSOFT® SYSTEM
FOR A NOISELESS CLOSURE

STANDARD SYSTEM



01

VARIO SPEED SYSTEM



02

PROFESSIONAL SYSTEM



03 04 12

TOP FIXING SYSTEM
FOR THE INSTALLATION FROM ABOVE
(BLIND CERAMICS)



05 06 10

D660 FIX

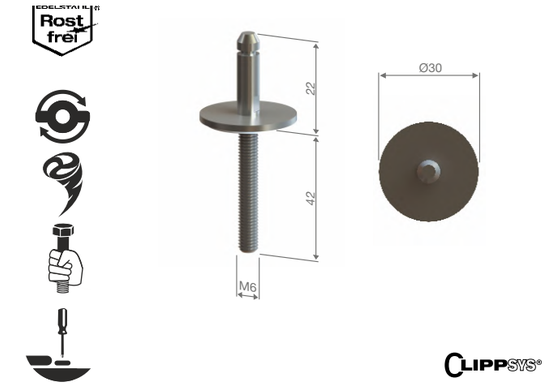

D662 ADJUSTABLE

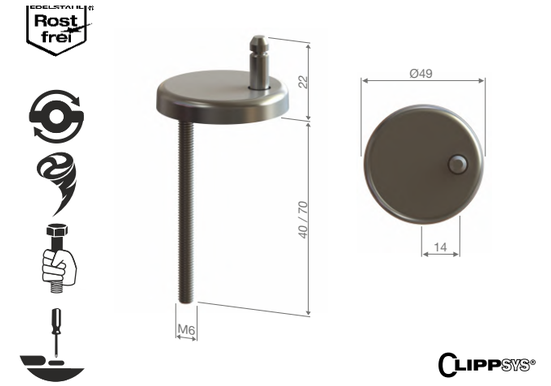

D680 FIX

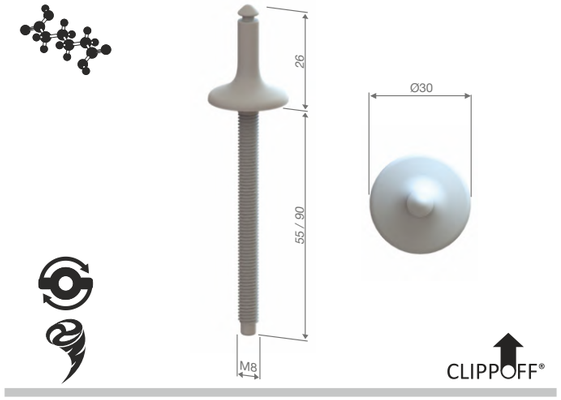

D682 FIX

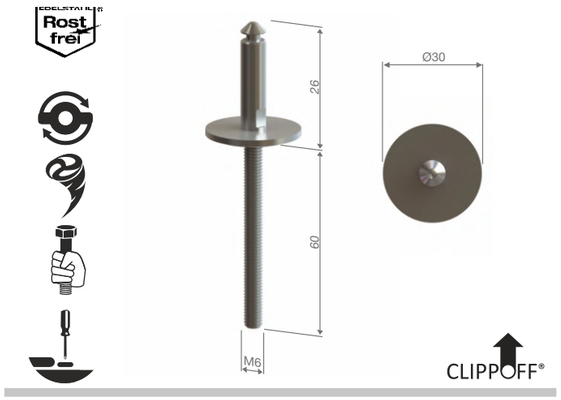

D681 ADJUSTABLE

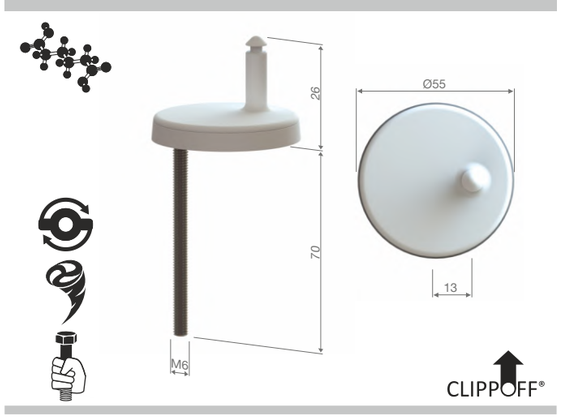

D683 ADJUSTABLE

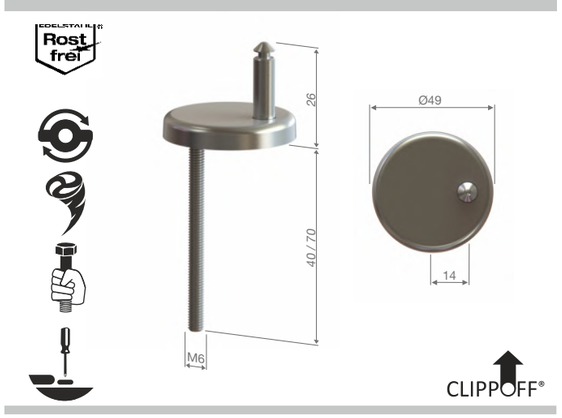

D684 ADJUSTABLE

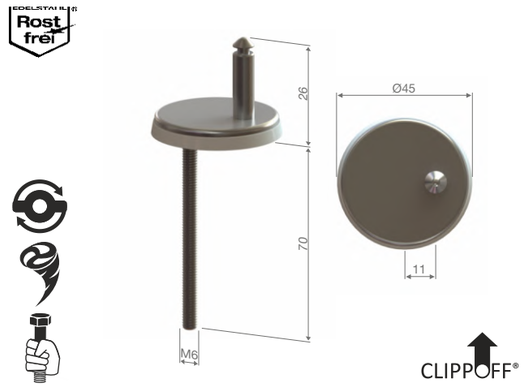

D685 ADJUSTABLE

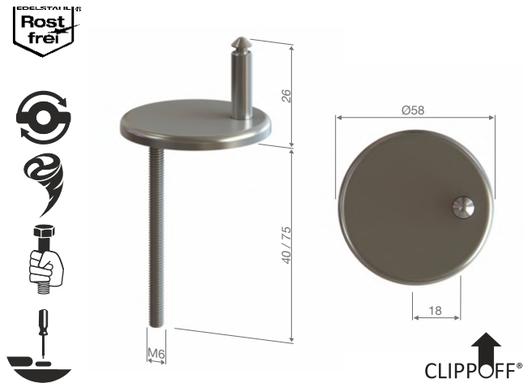

D500 OFF CENTRE



D203 FIX

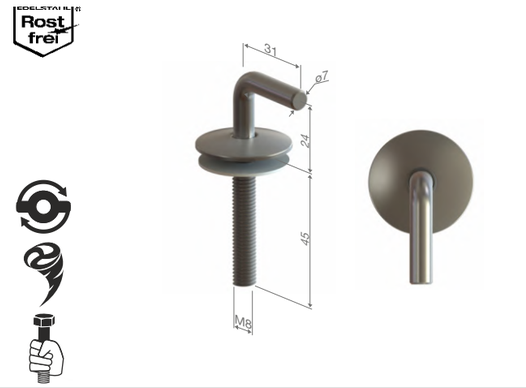

D002 FIX

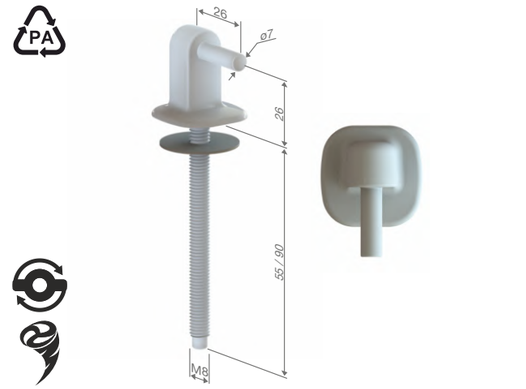

D003 OFF CENTRE

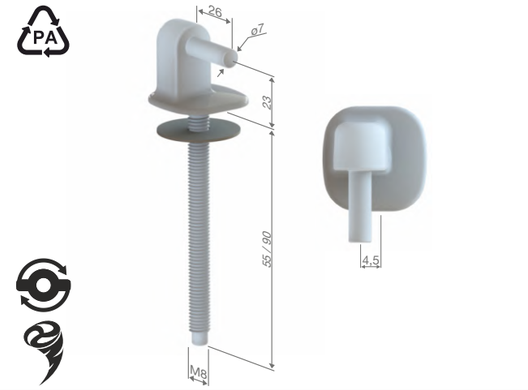

D221 OFF CENTRE

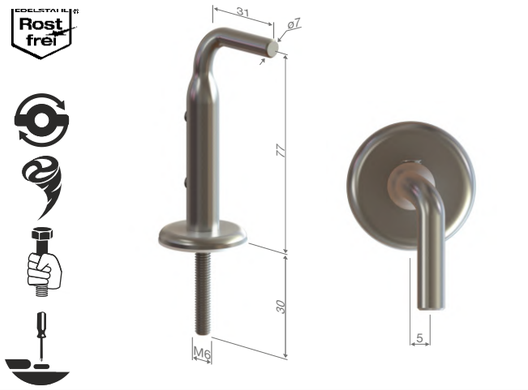

D222 FIX

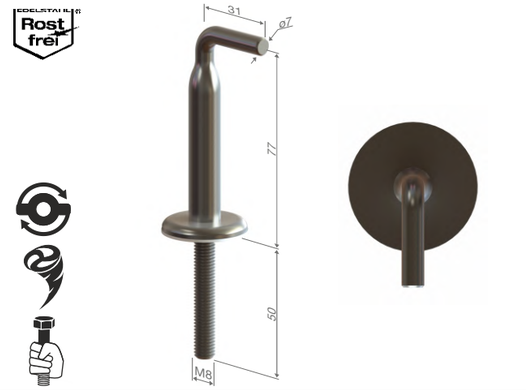

D200 OFF CENTRE

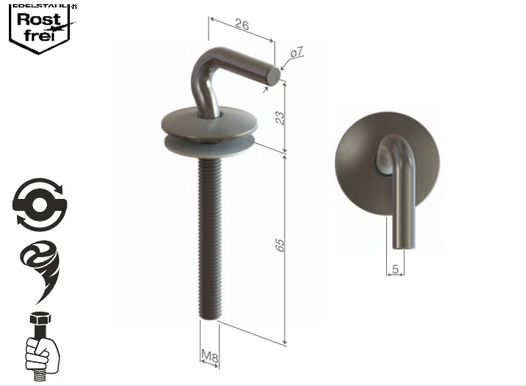

D201 OFF CENTRE

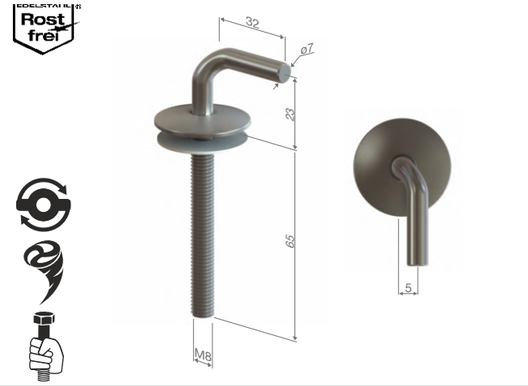

D207 OFF CENTRE



D208 FIX

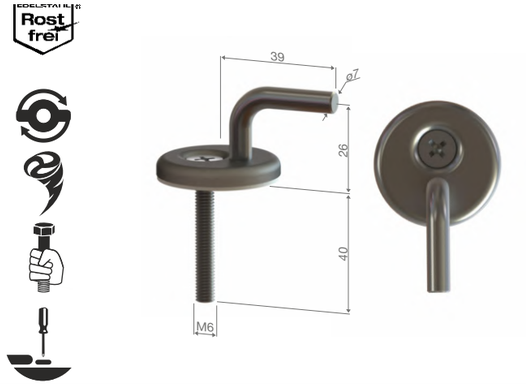

D250 FIX

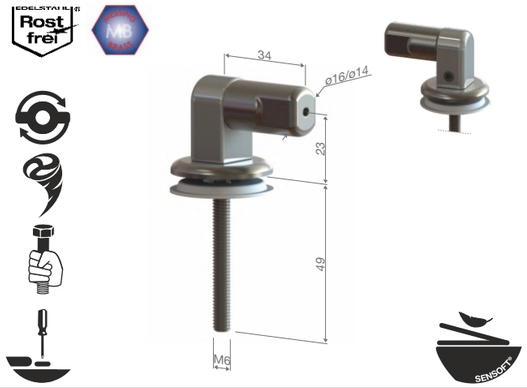

D213 FIX

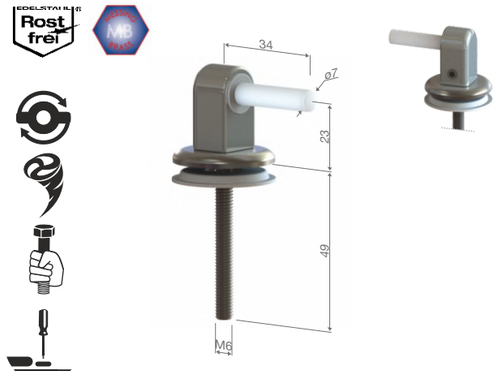

D300 ADJUSTABLE

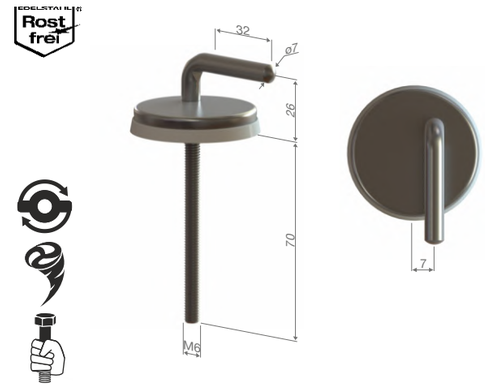

D304 ADJUSTABLE

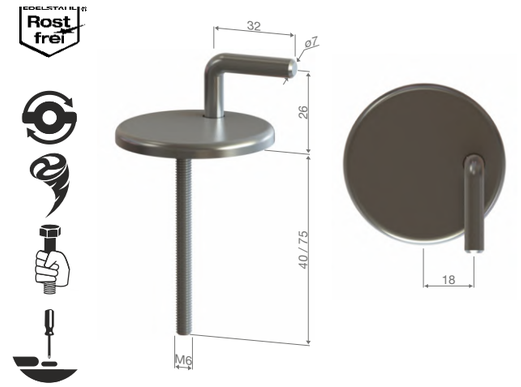

D216 FIX

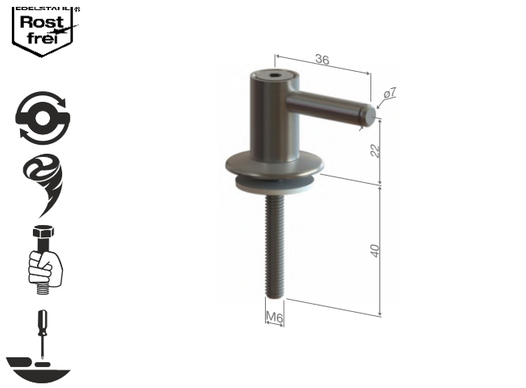

D220 FIX

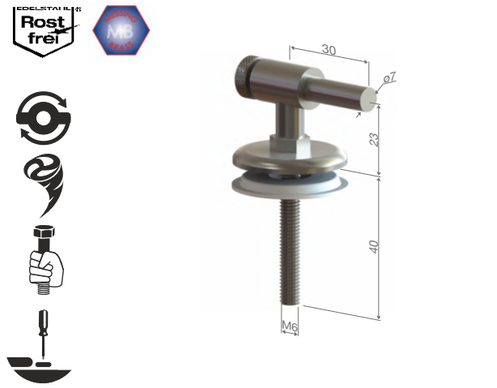

D352 ADJUSTABLE

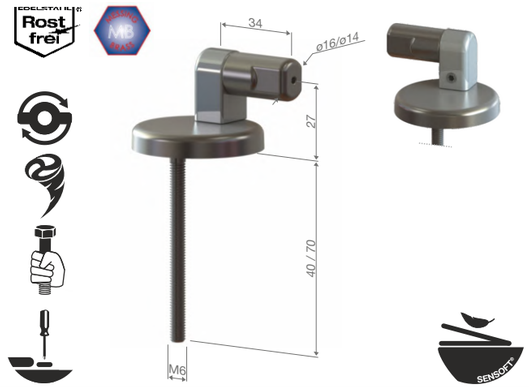

D450 ADJUSTABLE BAR

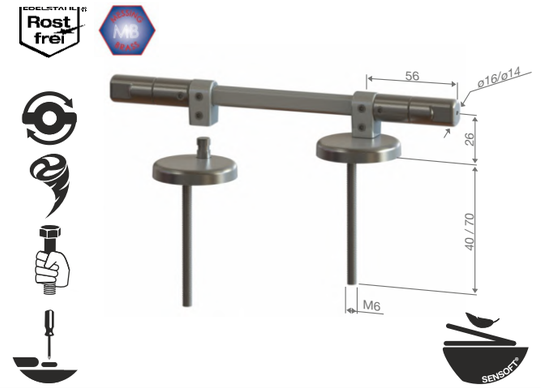

D102 ADJUSTABLE

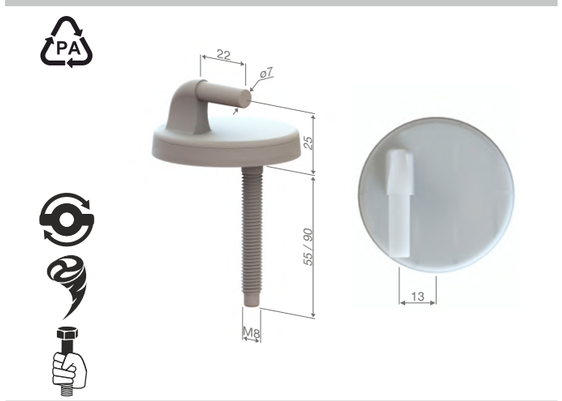

D103 ADJUSTABLE

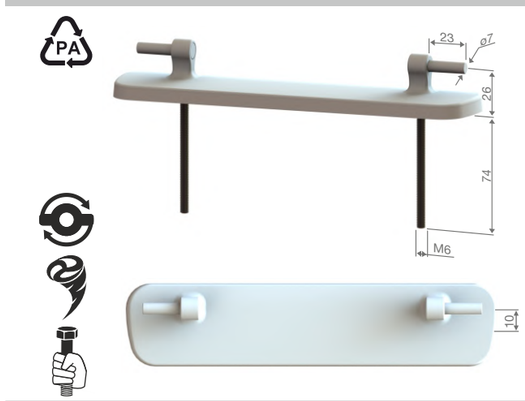

D306 ADJUSTABLE

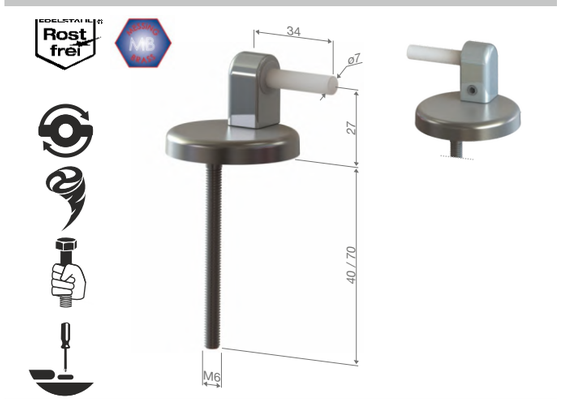

D502 ADJUSTABLE

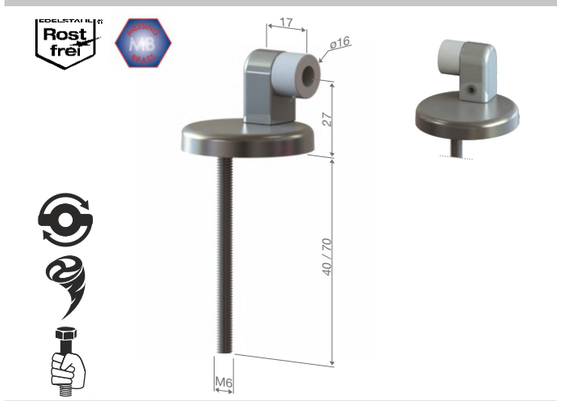

BUFFERS

KIT 1.1



KIT 1.2



KIT 2.1

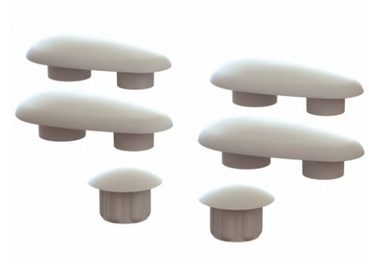

KIT 2.2

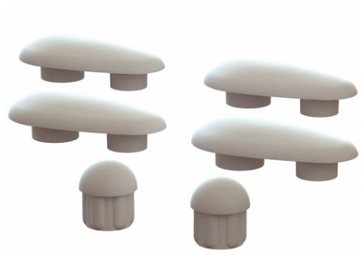

KIT 3.1



KIT 4.1



KIT 4.2



KIT 4.3



KIT 5.1



JBMC
toilet seats

JBMC - Indústria de Plásticos S.A.
ZONA INDUSTRIAL DE NADAIS
APARTADO 673
4524-908 ESCAPÃES (SMF) PORTUGAL

TEL. +351 256 384 870
(Portuguese standard phone system)

geral@jbmc.pt

CERTIFICAÇÃO apcer ISO 9001 ISO 14001
IQNET RECOGNIZED CERTIFICATION
CERTIFICAT CSTB NF ABATTANTS DE WC
PME líder'25

www.jbmc.pt